Track friendly vehicles
- principles, advantages

Sebastian Stichel

August 8, 2007

grönatåget

BOMBARDIER

What is track friendliness

A track friendly vehicle is a vehicle that causes low maintenance costs on the track *(and on the vehicle)*

and enables trains to run on existing non-perfect track.

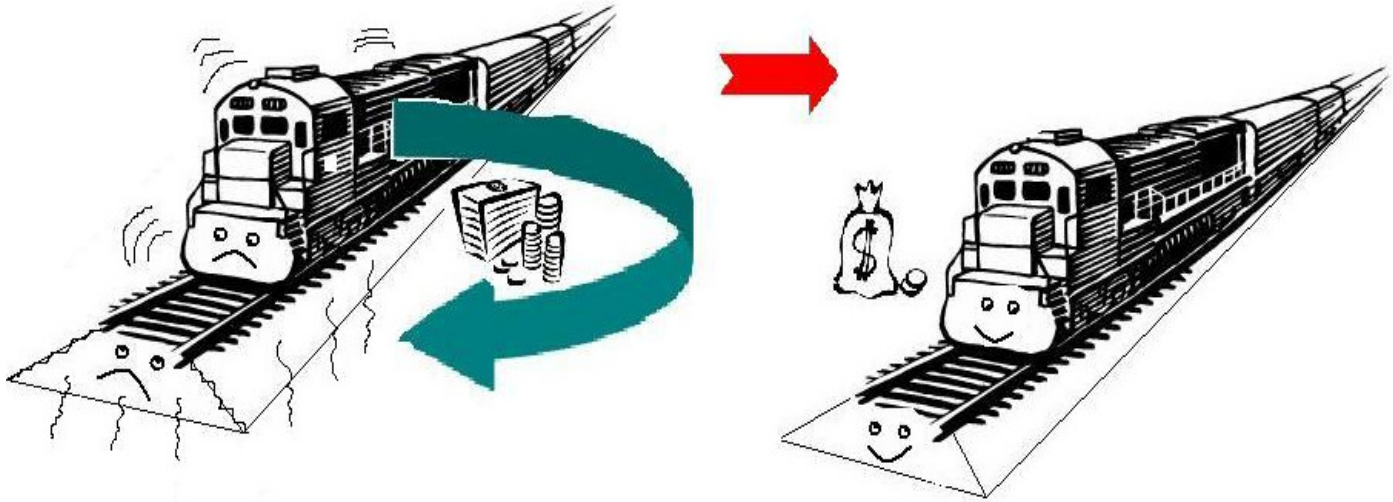

BOMBARDIER

Advantages of track friendly vehicles

- **Reduced track maintenance cost**
  → allows lower track access charges

- **Higher permitted speed in curves**
  → reduced travel times

Bogie design for track friendly vehicles

Conventional stiff bogie:

Track friendly bogie:

- **Lateral track damage is a function of curving performance.**
- **Curving performance is a function of primary plane stiffness and bogie wheelbase.**
  - **Low yaw stiffness in bogie**
  - **Optimize damping.**
- **Vertical track damage is among others a function of axle load**
  - **Light vehicles with moderate axle loads**

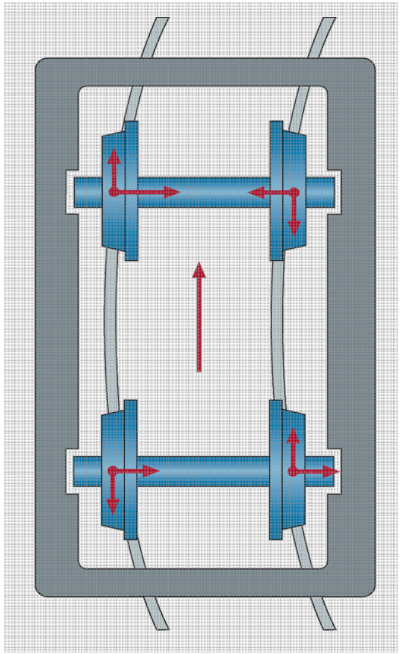

Radial self-steering bogies
Limitations

- **A soft wheelset guidance, without adequate damping, will usually exhibit undamped lateral oscillations (instability or hunting) already at quite low speed (below 100 km/h). There is a certain conflict between curving ability and dynamic stability.**

  → The stiffness must not be too low

Passenger and commuter cars

375 cars

Radial self-steering bogies desired by the former Swedish State Railways (SJ) as a mean of reducing excessive wheel and rail wear.

Order placed with former ASEA (ABB -> Adtranz -> Bombardier).

From 1982 introduced on

- **passenger cars (160 km/h)**
- **commuter cars (140-160 km/h);**

Wheel wear - example

Wheel flange wear for two types of bogies (April-Sep)

- STD **= standard "stiff" bogies**
- Asea **= Radial steering bogies, as tested by SJ**

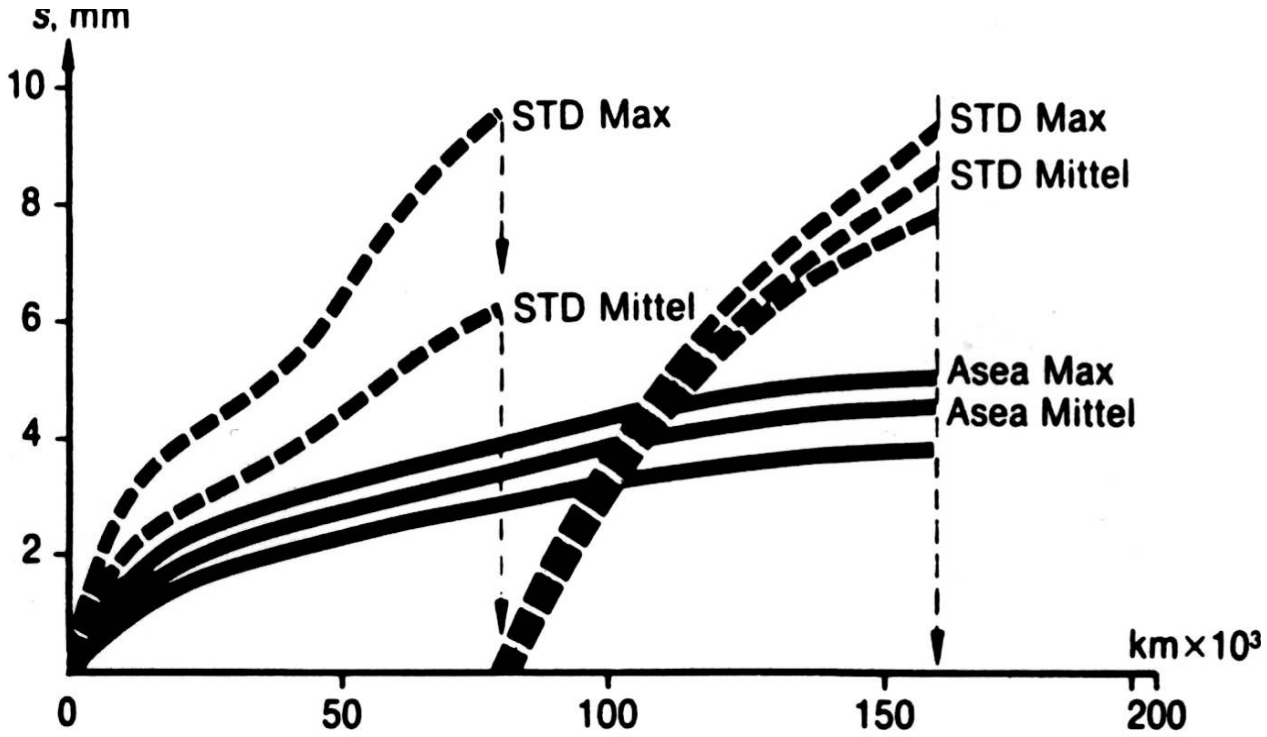

BOMBARDIER

Fast regional trains

458 cars (end of 2006)

From 1999 introduced on motor coach trains

- **Oeresund Train Unit (180 km/h) (DK, SE)**
- ***Flytoget, Signatur* & *Agenda* (210 km/h) (Norway)**
- ***Regina* (180-200 km/h) (SE)**

High-speed tilting trains

230 cars and 44 power units

- **From 1990 introduced on *X2000* tilting trains (200 km/h) in Sweden and China.**

BOMBARDIER

Regina 250

grönatåget

Passive bogie

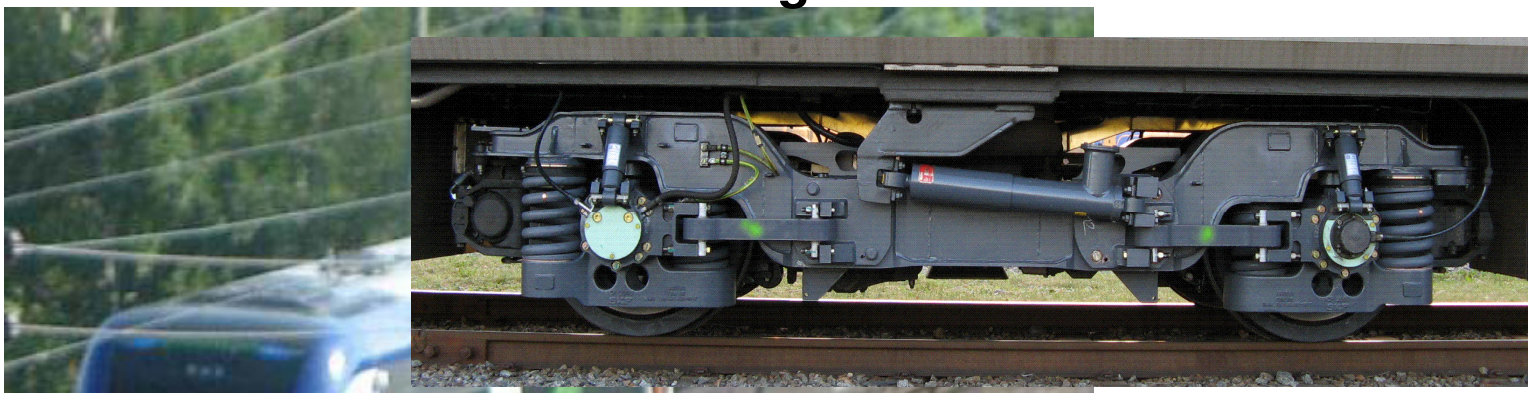

Mechatronic bogie

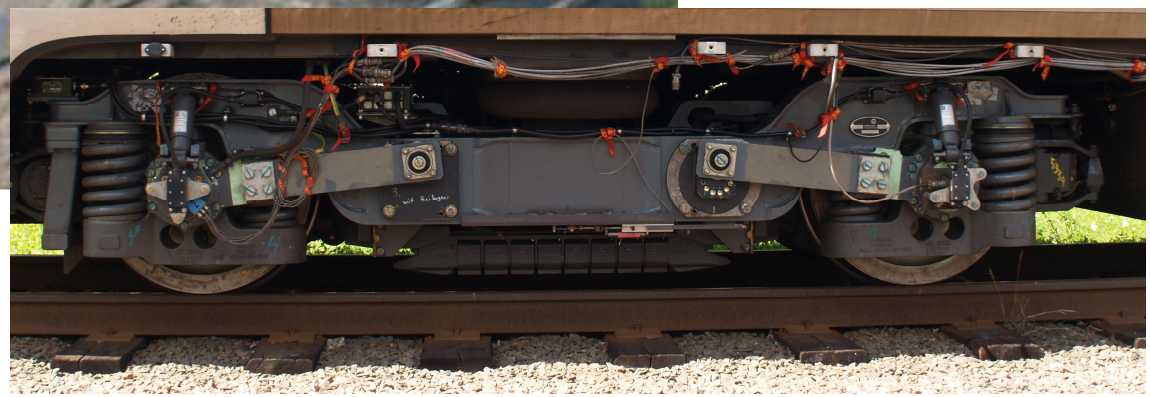

BOMBARDIER

Development for higher speed

grönatåget

Green Train

- **Radial self-steering bogies of different guiding stiffness – ”soft” and ”medium”- are successfully tested in summer 2006 and 2007.**
- **Tests by multi-body** simulation **as well as** on-track **with instrumented force-measuring wheels.**
- **Stability criteria on straight track are met (with margin) with both ”soft” and ”medium” settings of wheelset guidance, at test speeds up to 281 km/h and eq. conicity up to ~0.3.**
- **Lateral track forces are typically 50 – 65 % of UIC limit values.**
- **Theory and simulations agree and have been favourably validated with on-track tests.**
- **Mechatronic bogie and active lateral secondary suspension tested in summer 2007**

Development for higher speed and track friendliness

- **Radial self-steering with optimum wheelset guidance and adequate yaw damping – to achieve both** stability at high speed **as well as a** low wheel and rail wear **on mainline Swedish track. "Soft" settings give the lowest wheel and rail damage (wear and rolling contact fatigue).**

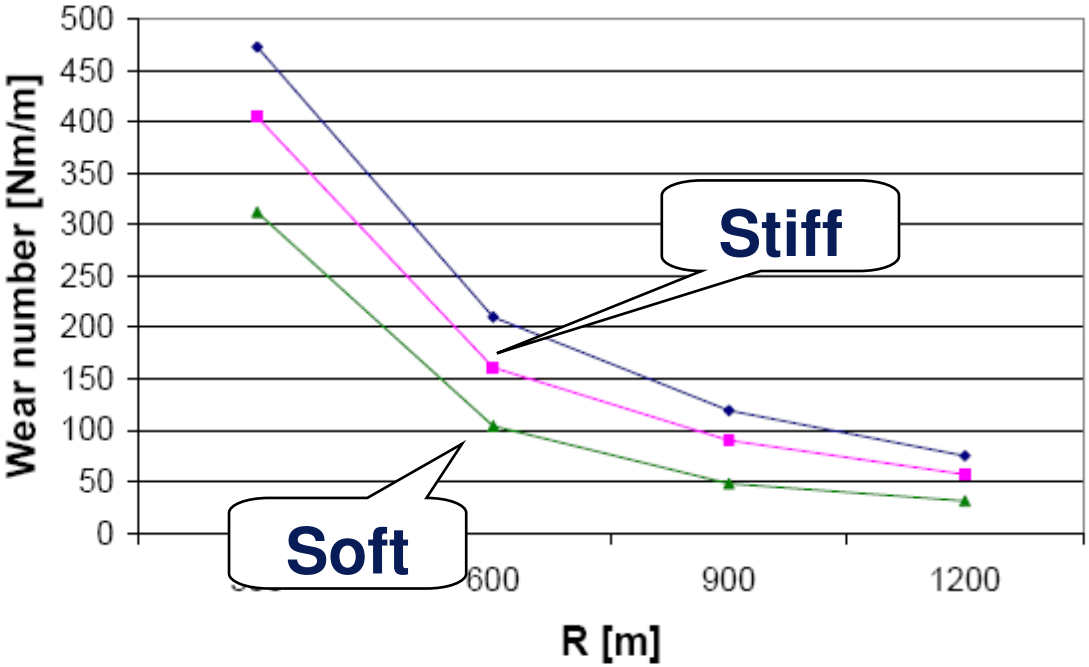

Axle 1,
Outer wheel

BOMBARDIER

Active secondary suspension in trains

- **Active lateral suspension**
  - Improved lateral vibration comfort
    Goal: Same ride comfort at 250 km/h as without active suspension at 200 km/h
- **Hold-off device**
  to keep carbody in centred position in curves
  ⇒ Move in bumpstops
  → Wider carbody possible
  → Better cross wind stability
  ⇒ Improved lateral vibration comfort by softer secondary suspension
  ⇒ Possible to run at high speeds in curves

Radial steering bogies
Future outlook

- **Differentiated track access charges dependent on the vehicle behaviour will be introduced on a number of European railway networks. This sharpens the need for ”track-friendly” bogies.**
- **Ongoing development seems to widen the application of self-steering bogies to *higher speed* (250 km/h and up). Many high-speed trains will be running on various track standards at various speeds, in particular tilting trains.**
- ***Actively controlled radial steering* – ”Mechatronic bogies” - is considered as an appropriate mean to achieve still higher performance and track-friendliness.**
- ***Active lateral suspension* to further improve ride comfort, and to make higher speeds in curves possible.**

Regina 250 for lower track access charges, shorter travel times and very good passenger comfort

- **Step-by-step development for track friendly bogies**

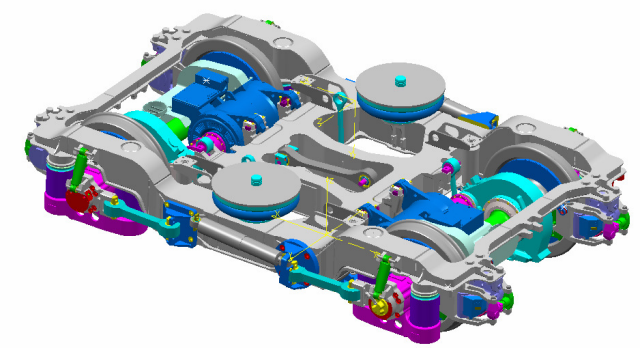

Regina for 250 km/h **Test 2007-2008**
Active radial steered, Mechatronic bogie

Regina for 250 km/h **Test 2007-2008**
Active lateral suspension, soft bogie

Regina for 250 km/h **Test 2006 -2007**
Passive radial steered, soft bogie

Regina for 200 km/h **Used today**
Passive radial steered, soft bogie

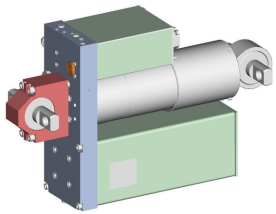

Active lateral actuator

BOMBARDIER